ASPIRE
BY HESTAN

Zamak Die Cast Knobs

Interior Lighting

c

STANDARD FEATURES

- Available in 30", 36"
- Spring assist for ease of opening hood
- Two 20 watt halogen interior lights for the brightest illumination
- Built-in ceramic infrared rotisserie burner from 12,000 to 14,000 Btu/hour (depending on model) with simple touch on function
- High performance stainless tubular burner at 23,000 Btu/hour each
- Stainless steel rod grate*
- High performance variable ceramic infrared sear burner at 23,000 Btu/hour
- Symmetrical flip to clean radiant tray with ceramic disc briquettes*
- 519 square inch total grilling surface for 30" model. 647 square inch total grilling surface for 36" model.
- Warming rack - 147 square inches for the 30", 183 square inches for the 36"
- External rotisserie motor with a single speed, 3 rpm, 40 in-lbs motor (Rotisserie Models Only)
- Marquise™ accented control panel and hood handle with commercial grade end caps*
- Hot surface ignition system
- Lifetime warranty on welded body, stainless tubular burners, variable sear burners, and rotisserie burner
- Heavy gauge welded body construction
- LED front control panel lighting with simple touch on function
- Monogrammed temperature gauge with cooking zone markings*
- Stainless steel removable drip tray for ease of cleaning
- Zamak die-cast knobs and bezels*
- Porcelain broiling pan with stainless steel rotisserie spit and forks (Rotisserie Models Only)

36" Model Shown

OPTIONS & ACCESSORIES

- Natural Gas (NG) or Liquid Propane (LP)
- Hestan signature color finishes Red-Matador, Black-Stealth, Blue-Prince, Orange-Citra
- High altitude kit
- Infinite position monogrammed removable smoker and handle for wood chips or smoker pellets
- Gas converstion kits (NG/LP)
- Vinyl Cover

* = *patent pending*

BUILT-IN GRILLS

www.hestanaspire.com phone 888.905.7463 3375 E. La Palma Ave., Anaheim, CA 92806

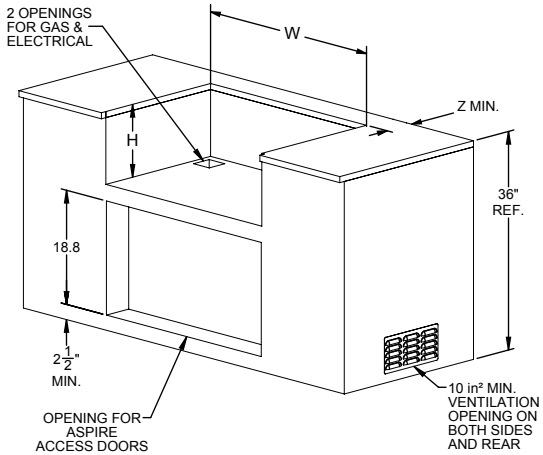

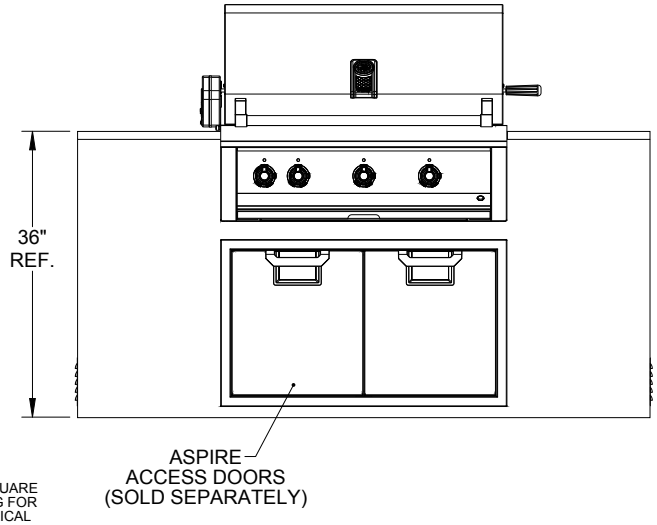

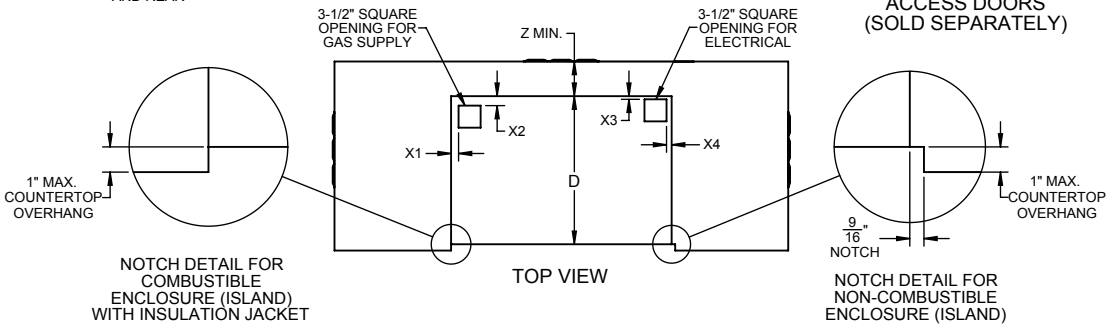

INSULATED JACKETS

Model Number	Description	W (in.)	D (in.)	H (in.)	X1 (in.)	X2 (in.)	X3 (in.)	X4 (in.)	Z (in.)
AGIJ30	Insulated Jacket, 30"	35	25-1/8	12-13/16	4-3/16	3-1/8	1-1/2	3-13/16	3-7/8
AGIJ36	Insulated Jacket, 36"	41	25-1/8	12-13/16	4-3/16	3-1/8	1-1/2	3-13/16	3-7/8
AGIJ42	Insulated Jacket, 42"	47	25-1/8	12-13/16	4-3/16	3-1/8	1-1/2	3-13/16	3-7/8

GAS REQUIREMENTS : ½" NPT gas connection. Minimum gas supply is 7" water column for natural gas and 11" for propane. Operating pressure at the manifold is 4" water column for natural gas and 10" for propane. All units require a regulated gas supply.

ELECTRICAL REQUIREMENTS :
120V, 60Hz, 5 amps

Intertek

Aspire by Hestan products are approved for outdoor use only. Hestan Commercial Corporation reserves the right to change materials and specifications without notice. Specify type of gas when ordering.

Built - In Models	Description	Cutout Dimensions W (in.)	D (in.)	H (in.)	X1 (in.)	X2 (in.)	X3 (in.)	X4 (in.)	Z (in.)	Total Btu's	Total Btu's with Rotis
E__30-NG / -LP	30" Grill Built-in	29	23-1/2	11-1/2	1-3/16	1-1/2	1/4	13/16	5-1/2	46,000	58,000
E__36-NG / -LP	36" Grill Built-in	35	23-1/2	11-1/2	1-3/16	1-1/2	1/4	13/16	5-1/2	69,000	83,000

__= specify burner configuration AB = all U- Burners MB= 1 Sear and the rest U-Burners R= with Rotisserie